HOUSING

HSDH-602F
Flush Mount Bracket

HSDH-602
Indoor Housing

HSDH-602SH
Outdoor Housing w/sun shield, fan & heater

HSDH-WL
Wall mount Bracket

HSDH-CL
Ceiling Mount Bracket

HSDH-CN
Corner Mount Adapter

HSDH-PL
Pole Mount Adapter

HSDH-602F

HSDH-602

HSDH-602SH

HSDH-WL

HSDH-CL

HSDH-CN

HSDH-PL

KEY FEATURES

HSDH-602F

- Easy to install
- Indoor Applications
- Enable view horizontally

HSDH-602

- Indoor housing for ScanDome™ III
- Protection against rain and wind (IP66)

HSDH-602SH

- Outdoor housing with sun shield, fan & heater for ScanDome™ III
- Protection against rain and wind (IP66)

SPECIFICATIONS

Model No.	HSDH-602F	HSDH-602	HSDH-602SH
Dimensions (mm)	ø200 (D) x 259 (H)	ø210 (D) x 298.5 (H)	ø240 (D) x 298.5 (H)
Weight	1.3 kg (2.9 lb) with heater kit	Approx 3 kg (6.6 lb)	Approx 3 kg (6.6 lb)
Maximum Load	Approx 2 kg (4.4 lb)	N/A	N/A
Material	Aluminum & Plastic	Aluminum & Acrylic	Aluminum & Acrylic
Operating Temp.	Indoor: 0°C to 50°C	0°C to 50°C	-50°C to 50°C
Input Voltage	N/A	N/A	AC24V / 3.5A
Power Consumption	N/A	N/A	55 Watt
Color	N/A	RAL 7035	RAL 7035
IP Grade	N/A	IP66	IP66

DIMENSIONS

(Unit : mm)

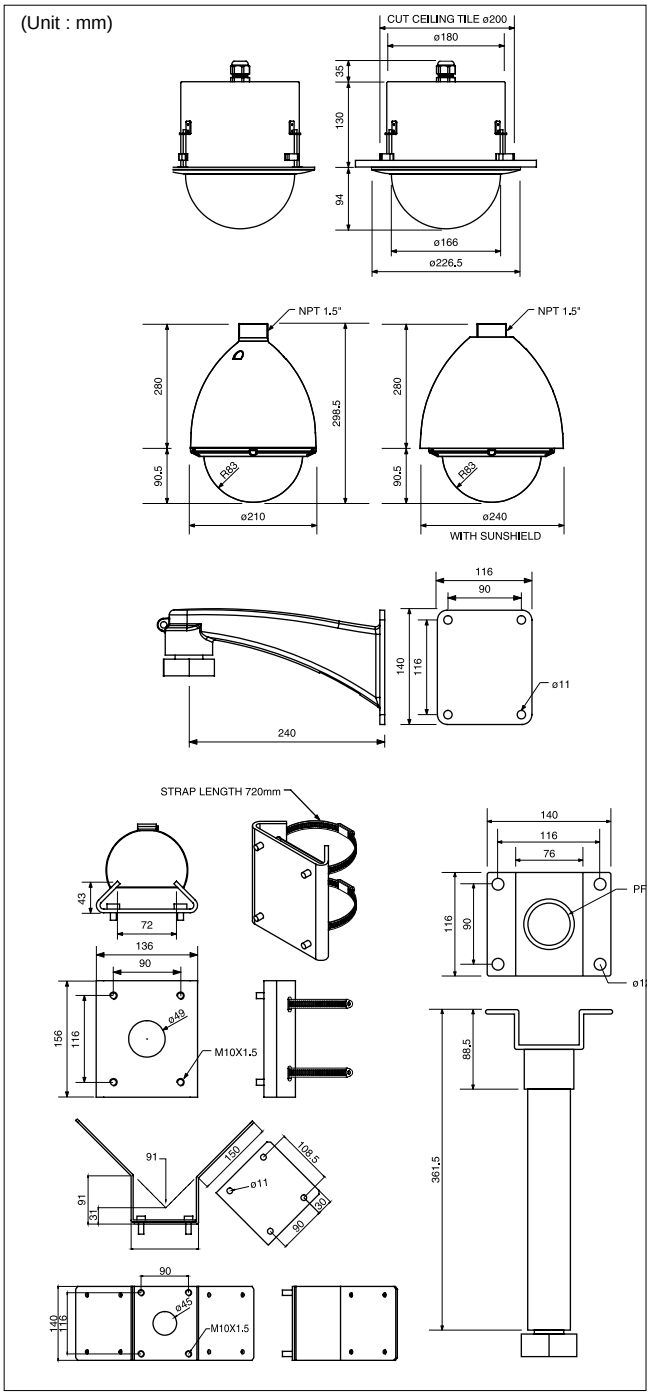

HSDH-WL (Wall Mount Bracket)

HSDH-CL (Ceiling Mount Housing)

HSDH-CN (Corner Mount Adapter)

HSDH-PL (Pole Mount Adapter)

SPECIFICATIONS

Model No.	HSDH-WL	HSDH-CL
Application	Wall Mount	Ceiling Mount
Dimensions (mm)	140.0 (H) x 116.0 (W) x 240.0 (L)	361.5 (H) x 140.0 (W) x 113.0 (L)
Pipe Specification	1.5` PT TAP	1.5` PT TAP
Weight	3.9 kg (8.6 lb)	3.9 kg (8.6 lb)
Maximum Load	Approx 10 kg (22 lb)	Approx 10 kg (22 lb)
Material	Aluminum	Aluminum
Finish	Light gray polyester powder coat	Light gray polyester powder coat
Color	RAL 7035	RAL 7035

Model No.	HSDH-CN	HSDH-PL
Application	Corner Mount	Pole Mount
Dimensions (mm)	91.0 (D) x 140.0 (L)	156.0 (H) x 136.0 (W) x 43.0 (L)
Strap Length		720 mm
Weight	1.2 kg (2.6 lb)	Approx 1 kg (2.2 lb)
Maximum Load	20 kg (44 lb)	10 kg (22 lb)
Material	Aluminum	Aluminum & Stainless Steel
Finish	Light gray polyester powder coat	Light Gray Polyester Powder coat
Color	RAL 7035	RAL 7035